REV	ECO #	DESCRIPTION	DATE

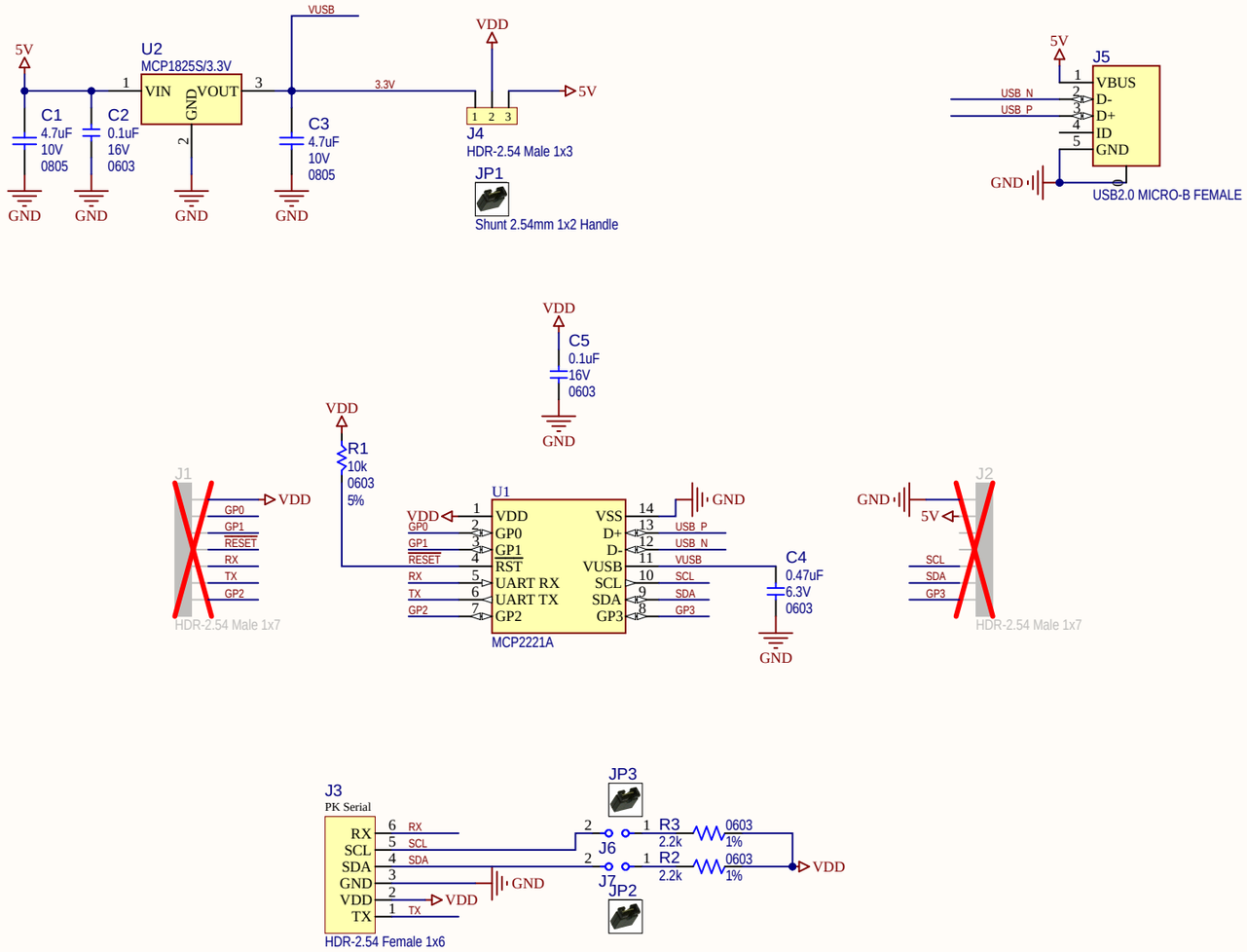

CBL1

USB Male-A to Male Micro-B

Drawn By: Adrian Toader	MICROCHIP
Engineer: Adrian Toader	
PartNumber: ADM00559	Project Title: *MCP2221A Breakout Module*
Sheet Title: MCP2221A	Designed with Altium — Altium.com
Size: B	Sch #:03-10241 · Date: 4/29/2020 12:52:20 PM · Revision:4 · Sheet 1 of 1
File: MCP2221.SchDoc	