AN3532

Microchip 15W Qi Wireless Receiver Reference Design

Author: Mihnea Rosu-Hamzescu
Sergiu Oprea
Microchip Technology Inc.

INTRODUCTION

Qi charging is a standard for wireless power transfer promoted by the Wireless Power Consortium (WPC). Currently, this standard is supported by many companies and products that conform to the standard, making it the wireless charging choice for portable consumer electronics. The Wireless Power Consortium specifications can be downloaded for free from www.wirelesspowerconsortium.com/knowledge-base/specifications/download-the-qi-specifications.html.

Wireless charging uses the principle of magnetic induction to transfer power. It is fairly similar to a conventional AC transformer, with the receiver and the transmitter coils representing the transformer windings. An important difference between the two is that the transformer has strongly coupled coils on a magnetic core, while the wireless charger has loosely coupled coils (coefficient <0.5) and the field transfers through air or other non-metallic, non-ferrous materials (plastic, wood, glass).

To charge a Qi wireless device, one simply has to place it on the Qi charger pad and it will automatically start charging. Additionally, the device is not plugged during charging and can be picked up and used at any time. Another underlying advantage is interoperability. All certified Qi wireless devices must be compatible and work together seamlessly. Therefore, there is no need for special, manufacturer-specific charging adapters or cables for each device. For devices used in humid or harsh environments, wireless charging means that they can be completely sealed and have a longer life and a lower cost.

The earlier Qi 1.1 standard only allowed the receiver to sink 5W of power, meaning that a one-cell Li-Ion battery could be charged at 1A. This obviously limited the battery capacity of the devices and extended charging times, unless a fast charging connector was available. Starting with Qi 1.2, the medium power profile was introduced, allowing devices to sink up to 15W of power and effectively tripling the charging current. One cell Li-Ion batteries (found in most smart phones) could be charged at 3A, double what the BC 1.2 USB (Battery Charging Standard) could provide and on par with most USB-C chargers. The Qi 1.2 medium power profile extends the usability of wireless charging to higher powered devices, such as home or semi-professional power tools, and generally to bigger things with bigger batteries, while retaining the advantage of interoperability and being able to completely seal the products.

OVERVIEW

The advanced Microchip wireless receiver is compatible with Qi 1.2 base stations and is able to draw up to 15W of power that can be used to run portable devices or charge batteries. It allows users to quickly incorporate this receiver into their designs without dealing with the Qi protocol state machine and communication.

This implementation consists of a wireless receiver and a synchronous buck converter used to charge batteries. A low-cost, general purpose 8-bit microcontroller handles the Qi state machine, communication to and from the base station, the Li-Ion battery charging state machine, and regulates the buck converter output voltage and input current. The microcontroller regulates the input/output parameters of the buck by varying the NCO (Numerically Controlled Oscillator) frequency with a fixed on-time (PFM – Pulse Frequency Modulation). Having this much functionality provided by a single component helps drive the cost down and simplifies the design. It is important to mention that all Qi 1.2 receivers must be backwards compatible with Qi 1.1 5W base stations and should be able to detect the base station capabilities.

The block diagram of the Microchip advanced Qi receiver is shown in Figure 1. The high-frequency signal at the output of the resonant tank (L_S, C_S and C_D) is rectified by a full-bridge rectifier implemented with four Schottky diodes. The output voltage of the rectifier (V_{IN}) is measured by the microcontroller through a resistive divider. The rectified voltage is applied at the input of a synchronous buck converter and a Low Drop-Out (LDO) voltage regulator, which supplies 5V to the microcontroller, Operational Amplifier (OA) and MOSFET driver.

© 2020 Microchip Technology Inc.

A complete Li-Ion charging algorithm is implemented in the microcontroller firmware and handles battery charging functionality. The output voltage of the buck converter is measured and regulated by the microcontroller for limiting charging voltage. The input current is also measured and regulated by the microcontroller using a shunt resistor and an MCP6001 amplifier (see www.microchip.com/DS20001733). Measurement of the input current is necessary to accurately measure input power and is critical in the Qi 1.2 communication protocol for Foreign Object Detection (FOD) using the power loss method. If the receiver input power is not accurately measured and transmitted as specified by the Qi standard, the base station will cut power.

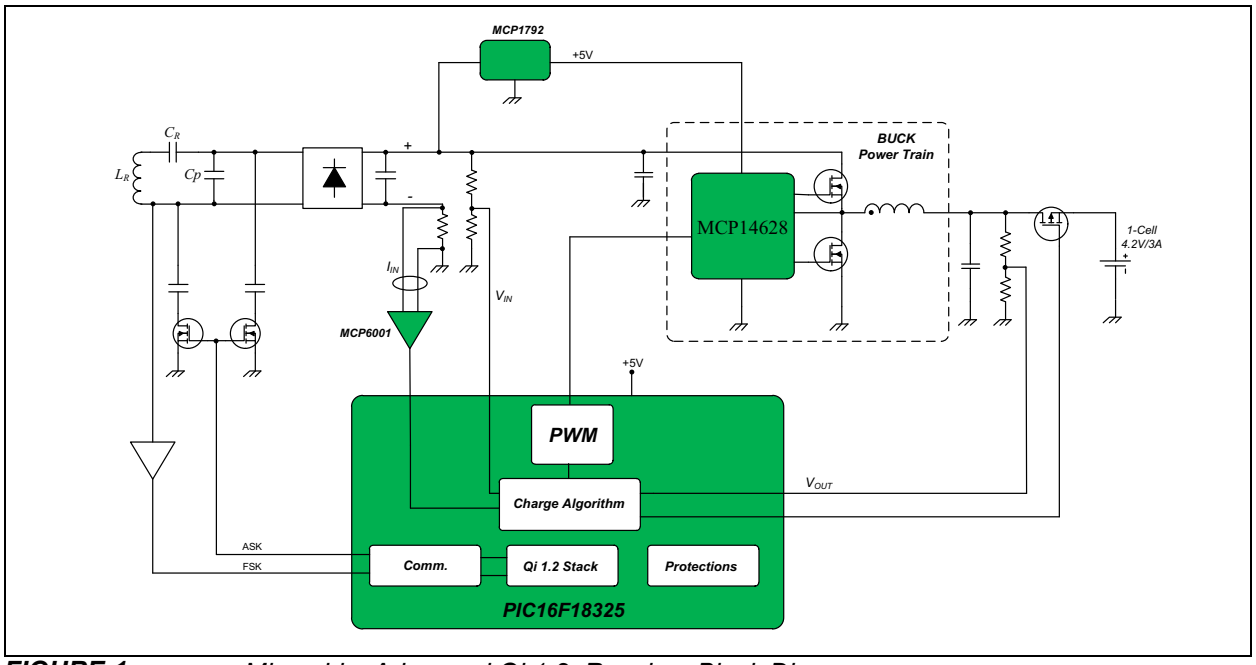

FIGURE 1: *Microchip Advanced Qi 1.2 Receiver Block Diagram.*

Two-way communication is a requirement for the Qi 1.2 protocol. The communication from the receiver to the base transmitter is implemented using Amplitude Shift Keying (ASK), as recommended by the standard. Two low-power MOSFETs and two capacitors are used to modulate the absorbed power. The communication from the base station to the receiver is implemented using Frequency Shift Keying (FSK). The power signal is first prepared by a signal forming network and then the information is decoded by the microcontroller.

Power conversion by the synchronous buck converter is very efficient at full load (~95%) and the input voltage is not critical due to the wide input range. On the other hand, the input current causes power dissipation on the diode rectifier and minimizing the input current is a good way to control the losses. For this reason, the voltage at the output of the rectifier (V_{IN}) is regulated at a value that is significantly higher than normal for a linear regulator (10V vs. 5V) in order to obtain the charging voltage for the battery. Output power is preserved but input current is lower. At fixed intervals, the power receiver will send error packets to the transmitter, steering the input voltage to the desired value.

The values of the resonant tank components (L_S, C_S and C_D) are critical and must be carefully selected. The values of the resonant capacitors are generally recommended by the manufacturer of the wireless charger inductor. However, these values can also be determined using the recommendations from Volume 1 of the WPC V1.2 specifications (see www.wirelesspowerconsortium.com/knowledge-base/specifications/download-the-qi-specifications.html). Examples on how to select the capacitor values are also presented in the Microchip Application Note: *AN3441, "Qi Wireless Power Micro-Receiver Reference Design"* (see www.microchip.com/DS00003441).

HARDWARE DESCRIPTION

The board consists of two parts, one related to the Qi functionality and one related to the battery charging functionality.

The schematic of the Microchip advanced Qi receiver is presented in Figure 2. L4 is the wireless receiver coil, C1 and C2 form the Series Resonant Capacitor (C_S) and C5 is the Detection Capacitor (C_D). The full wave rectifier is implemented using four Schottky diodes, D1-D4. The rectified voltage is filtered by capacitors C7-C11, and measured by the microcontroller using the resistive divider formed by R7 and R8.

The input current is sensed using the R22 shunt resistor (50 mΩ) and an amplifier stage (U4 amplifier, R19-R21 and C20). The gain of this amplifier is set to 20.

© 2020 Microchip Technology Inc.

© 2020 Microchip Technology Inc.

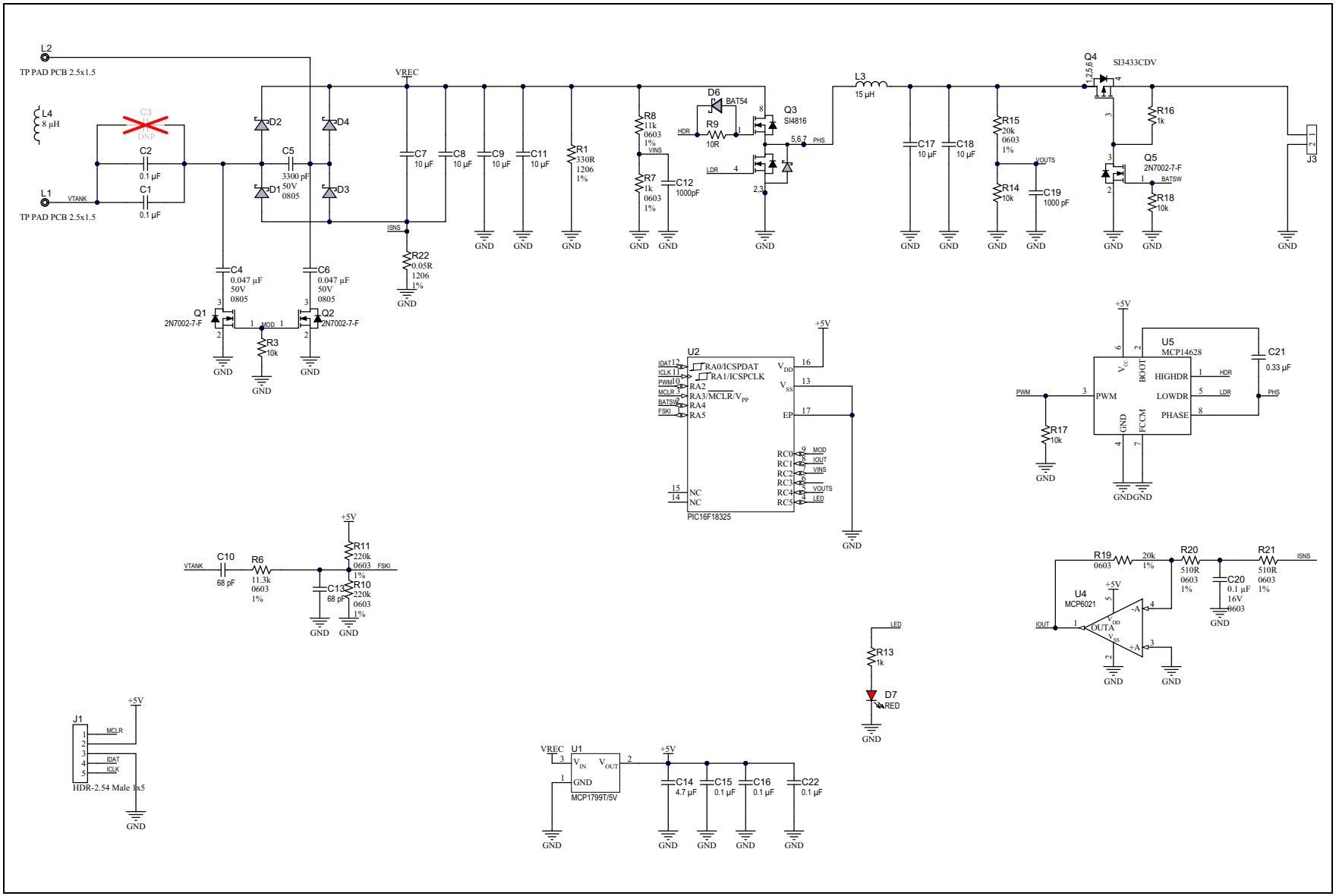

FIGURE 2: *Schematic of the Microchip Advanced Qi Receiver.*

The input voltage and current measurement is critical for the Qi functionality because accurate input power calculation is required for the communication protocol.

Transistors Q1, Q2 and capacitors C4, C6 are used for modulating input current for the receiver to base station ASK communication. Resistors R6, R10 and R11, and capacitors C10 and C13 function as a signal forming network for the base to receiver FSK communication. Outgoing and incoming communication is handled by the PIC16F18325 (U2) (see www.microchip.com/DS40001795).

A synchronous buck converter, driven by the MCP14628 (U5) (see www.microchip.com/DS22083) and controlled by the PIC® microcontroller, provides Li-Ion battery charging functionality with high efficiency. Output voltage is measured using the resistive divider formed by R14 and R15. The maximum output current depends on the available power from the wireless receiver and is not measured directly. Instead, input current is monitored and limited with satisfactory results and accuracy. All battery charging parameters are software-customizable, allowing the user to adapt this design to different chemistries.

The MCP1799 LDO (www.microchip.com/DS20006248) regulator provides up to 80 mA of current at 5V to the microcontroller, operational amplifier and MOSFET driver.

FIRMWARE DESCRIPTION

The firmware is provided as an MPLAB® X IDE project and the user has the option to add custom functionality and modify some parameters related to the wireless charging functionality. These parameters are located in the `qi_12.h` file. These parameters are related to:

- Manufacturer code (2 bytes of code)
- Basic identification code (4 bytes, split into HI and LO words)
- Circuit input voltage (after LC resonant tank with a diode rectifier, hardware-dependent)
- Input diode rectifier voltage drop (ADC units, hardware-dependent)
- Received power calculation coefficients (hardware-dependent)
- Receiver resonant tank quality factor (hardware-dependent)

As required by the application, additional functionality may be added to the core firmware, but any modifications must take into consideration the initial peripheral configuration.

The first requirement is that the PIC MCU runs at 16 MHz, not 32 MHz, as the input voltage can drop under 3V in certain conditions. As stated in the data sheet (see www.microchip.com/DS40001795), 32 MHz operation is not ensured with a voltage supply under 3V over the whole temperature range.

Another requirement related to input voltage variations is the ADC reference voltage, provided by the FVR. The ADC reference should be set to 2.048V, allowing it to accurately measure the input voltage, even if it drops below 3V.

The main loop timer, which is also the base timer for the ADC channel read function, and the Qi state machine timing is TMR0 running at 4 kHz. Modifying the timer frequency will modify the Qi data packet intervals and has a functionality breaking potential. Any additional functionality introduced by the user needs to use non-blocking code and be aware of the time needed to execute. Any code needing longer than 200-250 µs to execute should be split into smaller chunks and executed sequentially.

The ADC reading function uses the TMR0 overflow as a trigger and is set to read the input voltage, input current and output voltage. Any additional ADC channels can be added into the reading chain, as required by the application. Too many channels can slow down the update rate for each parameter and cause the firmware to react slower to changes.

The PIC MCU is equipped with a PPS peripheral allowing peripheral inputs/outputs to be remapped. Also, ADC channels can be changed as needed by the application, as long as the correct channel values are used in the reading chain (make sure the correct values end up in the voltage and current variables).

The Qi data packets transmitted by the receiver to the base station use a Biphasic Manchester Coding (BMC) and ASK modulation. The data rate specified by the standard is 2 kbps, leading to a half bit frequency of 4 kHz. Data modulation is performed on the TMR2 interrupt to ensure minimal disturbance of the bit timing by the main loop. It is highly recommended not to modify any TMR2 related settings.

Demodulating the FSK encoded data packets from the base station in Qi 1.2 mode is done using the CCP1 peripheral and TMR1. The same recommendation stands for these peripherals, not to modify the related settings.

Any additional code handling interrupts should be non-blocking and execute as quickly as possible, otherwise transmission/reception errors may occur.

Alternately, applications not needing to run tasks during the Qi charging process may use a routine that monitors input rectifier voltage and can switch between Qi charging functionality and user application when appropriate. In this case, the user application has no coding restrictions, but needs to quickly switch (<10 ms) to Qi charging when detecting a certain input voltage level ($V_{RECTIFIER}$).

© 2020 Microchip Technology Inc.

QI PARAMETERS

Identification Packet Customization

Qi major version is fixed to 1 and minor version is fixed to 2 to reflect the extended 15W Qi 1.2 capabilities of the device. Please note that Qi 1.2 is backwards compatible with Qi 1.1 and the receiver will revert to Basic mode if the base station is only Qi 1.1 capable. The Manufacturer Code and Basic Device Identifier are customizable.

MANUFACTURER CODE

The Manufacturer Code is defined in the Qi standard as a bit string that identifies the Power Receiver, as specified in the Power Receiver Manufacture Codes, Wireless Power Consortium. The code is a 16-bit value found in the identification packet data transmitted by the receiver. It can be modified by changing the `MANUFACTURER_CODE` define in the `qi_12.h` file.

BASIC IDENTIFICATION CODE

The Basic Device Identifier is a 32-bit string that contributes to the identification of the Power Receiver. The manufacturer should ensure that each device has a sufficiently unique combination of Basic Device Identifier and Manufacturer ID codes. Embedding a serial number of at least 20 bits in the Basic Device Identifier is sufficient for this task. Table 1 from the Qi 1.2.3 standard shows the identification packet bit fields (www.wirelesspowerconsortium.com/knowledge-base/specifications/download-the-qi-specifications.html).

The EXT field of the Basic Device Identifier should be set to zero, since the current implementation does not support extended identification packets. The Basic Device Identifier can be modified by changing the `BASIC_IDENT_CODE_HI` and `BASIC_IDENT_CODE_LO` defines in the `qi_12.h` file; both are 16-bit values.

Please note that both the Manufacturer Code and the Basic Device Identifier are in big-endian format. The PIC MCU firmware will invert the byte order in each word when transmitting the packet.

TABLE 1: IDENTIFICATION PACKET BIT FIELDS

	b7	b6	b5	b4	b3	b2	b1	b0
B0	Major Version				Minor Version			
B1 **B2**	(MSB) Manufacturer Code (LSB)							
B3 **B4** **B5** **B6**	Ext	(MSB) Basic Device Identifier (LSB)						

Input Voltage Regulation

Voltage regulation at the receiver input is regulated using control error packets that tell the base station the relative deviation of the current value compared to the desired input voltage. In this case, the input voltage is read after the diode rectifier bridge, so it does not include losses on the diodes. The PIC MCU firmware will calculate the error for the control packets and send the data. The voltage set point can be modified by changing the `VIN_SETPOINT` and `VIN_SETPOINT_LP` (for 5W Basic mode) defines in the `qi_12.h` file. Please note that the value is in ADC units and must be calculated using the ADC resolution, voltage reference and input voltage divider.

For the Qi 1.2 15W Receiver, the ADC resolution is 10 bits, voltage reference is 2.048V, the input divider is 1/12 and the set voltage is 10V. For Qi 1.1 5W mode, the set input voltage is 8V. See Equation 1.

EQUATION 1: INPUT VOLTAGE SET POINT CALCULATION

$$V_{SET_ADC} = \frac{V_{IN} \times 2^{ADC_BITS}}{V_{IN_DIV} \times V_{REF}} = \frac{10V \times 1024}{12 \times 2.084} = 416.667$$

Input Rectifier Diodes Compensation

The voltage drop on the input diodes is not measured and must be compensated in order to calculate the input power more accurately. A simple way to achieve this is to add the voltage drop (at full current) to the input voltage before calculating power. In a rectifier bridge, there are usually two diodes conducting, so considering a 0.5V drop per diode, the ADC unit value is calculated in a similar way to the voltage set point. See Equation 2.

EQUATION 2: DIODE VOLTAGE DROP CALCULATION

$$V_{DROP_ADC} = \frac{(V_f \times 2) \times 2^{ADC_BITS}}{V_{IN_DIV} \times V_{REF}} = \frac{1.0V \times 1024}{12 \times 2.084} = 41.66$$

The input diodes voltage drop can be modified by changing the `RECT_DROP_CORR` define in the `qi_12.h` file.

Received Power Calculation Coefficient

A Qi power receiver must periodically transmit a calculated received power value based on measuring the input values and estimated losses. The base station compares this value to the locally measured transmitted power and uses this information for the FOD (Foreign Object Detection) functionality.

The Qi 1.2 receiver must support both the extended 1.2 protocol and the basic 1.1 communication in case the base station is a basic 5W model.

For the Qi 1.1 protocol, power is transmitted to the base station normalized to 5W and scaled to a value between 0 and 128. See Equation 3.

EQUATION 3: Qi RECEIVED POWER VALUE

$$P_{Qi} = \frac{P_{measured}}{5W} \times 128$$

To calculate the power value for the power packet from ADC values, all constants (such as input voltage divider, current shunt and amplification) can be combined into one coefficient. See Equation 4 and Equation 5.

EQUATION 4: VOLTAGE AND CURRENT FROM ADC UNITS

$$V_{in} = \frac{V_{IN_ADC} \times V_{IN_DIV} \times V_{REF}}{2^{ADC_BITS}} = \frac{V_{IN_ADC} \times 2.048V \times 12}{1024}$$

$$I_{in} = \frac{I_{IN_ADC} \times V_{REF}}{2^{ADC_BITS} \times R_S \times A} = \frac{I_{IN_ADC} \times 2.048V}{1024 \times 0.05\Omega \times 20}$$

The Qi receiver uses a 0.05Ω input shunt resistor and x20 amplification.

EQUATION 5: Qi RECEIVED POWER CALCULATION.

$$P_{Qi} = \frac{P_{measured}}{5W} \times 128 = \frac{(V_{in} + 2V_f) \times I_{in} \times 128}{5W} =$$

$$\left(V_{IN_{ADC}} + V_{DROP_ADC}\right) \times I_{IN_{ADC}} \times 0.0012288$$

The result is scaled by 2E18 to maintain accuracy: 0.0012288×2^{18}=322.1225472. See Equation 6.

EQUATION 6: Qi RECEIVED POWER FROM ADC UNITS

$$P_{Qi} = \frac{(V_{IN_{ADC}} + V_{DROP_ADC}) \times I_{IN_{ADC}} \times 322}{2^{18}}$$

Values are proportional for the 10W and 15W levels, and must be calculated and defined separately. See Equation 7 and Equation 8:

EQUATION 7: Qi RECEIVED POWER FROM ADC UNITS (10W)

$$P_{Qi} = \frac{P_{measured}}{10W} \times 32768 =$$

$$(V_{IN_{ADC}} + V_{DROP_{ADC}}) \times I_{IN_{ADC}} \times 0.15272864 =$$

$$\frac{(V_{IN_{ADC}} + V_{DROP_ADC}) \times I_{IN_{ADC}} \times 161}{2^{10}}$$

EQUATION 8: Qi RECEIVED POWER FROM ADC UNITS (15W)

$$P_{Qi} = \frac{P_{measured}}{15W} \times 32768 =$$

$$(V_{IN_{ADC}} + V_{DROP_{ADC}}) \times I_{IN_{ADC}} \times 0.1048576 =$$

$$\frac{(V_{IN_{ADC}} + V_{DROP_ADC}) \times I_{IN_{ADC}} \times 107}{2^{10}}$$

When using the extended profile, the receiver will try to negotiate with the base station a maximum power level, starting with 15W. If not successful, the receiver will retry for 10W and then 5W maximum power. The three coefficients are used to calculate received power for the three possible power levels.

For the described hardware configuration, the user should define 3 values in `qi_12.h`:

```
#define     PCAL_COEF_15W     107
#define     PCAL_COEF_10W     161
#define     PCAL_COEF_5W      322
```

Receiver Resonant Tank Q-Factor

Qi 1.2 receiver requires production measurement of the resonant tank Q-factor to be used during the selection phase (the base station will “ping” the receiver and measure the amplitude decay rate, or use any appropriate method to calculate the quality factor).

The reference quality factor is transmitted by the RX during the negotiation phase and the base station compares it to the measurement performed in the selection phase. If the measurement result is under a set threshold, it is considered a Foreign Object Detection event and the base cuts power.

© 2020 Microchip Technology Inc.

The manufacturer must measure the quality factor of the receiver in a manner described in Section 11.3 of the Qi standard and write the proper value for the `RX_QFACT` define in `qi_12.h`. (www.wirelesspowerconsortium.com/knowledge-base/specifications/download-the-qi-specifications.html).

Battery Charging Parameters

The code handling battery charging is available to the user and may be modified as needed by the application. It features a full CC/CV charging algorithm, suitable for Lithium chemistry batteries (LiCo, LiMn, LiFePO and many more) and lead-acid types. The main focus of this document is on Lithium batteries. For this particular charger implementation, the output voltage divider is 1/3 with a 2.048V ADC reference. The battery charger state machine function is called every second and the user must take care not to modify the timing.

General settings related to charging are found in the `BatteryCharger.h` file.

Charging settings related to chemistry and battery configuration are found in the `LiChem.h` file.

The `OUTPUT_CALIB` define tells the state machine to go into Calibration mode. There won't be any pre-charge or charging termination conditions; output current will be set to maximum. This mode is only used during development and should be disabled during normal use of the charger.

`IMIN_UPDATE` tells the state machine how many times to debounce the current (I_{SENSE}) value before updating the minimum charging current recorded value used for charge termination.

`VBAT_DETECTION` and `I_BAT_DETECT` are values used to detect the presence of a battery while the converter is off or on. Values are calculated in ADC units based on the hardware configuration.

`VOUT_RELAX_TIME` is normally used for lead-acid batteries when starting float charge and the charging current is very low for a short time. Any presence detection or charge termination conditions are ignored for this number of seconds.

`VOUT_RISE_FAULT` enables a charge termination condition related to the battery voltage rise. If the battery voltage does not rise for a number of seconds, defined by `VFLAT_COUNT`, the battery state machine goes to Fault mode and stops charging.

`PRECHARGE_TIME` is the maximum length in seconds of the Precharge state. If the voltage doesn't rise above `CUTOFF_VOLTAGE` after the maximum time, the battery state machine goes to Fault.

`IFLAT_COUNT` is related to the secondary charge termination condition triggered by flat charging current. It defines the number of seconds of flat current after which the state machine terminates charge.

Calculating Battery Specific Parameters

The hardware described in this document uses two software control loops to charge the battery. The buck converter's output voltage and the input current are regulated. There is only one current shunt for input current as accurate input power calculation is required for the Qi 1.2 protocol. Since input voltage is tightly regulated by the protocol, output current can be easily calculated.

Input current has been discussed in the received power calculation coefficient section. A 0.05Ω shunt and x20 amplification results in 1 V/A gain. The converter output voltage divider is 1/3, using a 2.048V ADC reference.

A few key charging parameters must be defined in `LiChem.h` to ensure functionality. The charging voltage, `CHARGING_VOLTAGE`, in this example is 4.2V and is defined using ADC units:

EQUATION 9: BATTERY CHARGING VOLTAGE IN ADC UNITS

$$V_{CHARGING_ADC} = \frac{V_{OUT} \times 2^{ADC_BITS} \times V_{OUT_DIV}}{V_{IN_DIV} \times V_{REF}} = \frac{4.2V \times 1024}{3 \times 2.048} = 700$$

`CUTOFF_VOLTAGE` is the deep discharge voltage limit, usually 3.0V. It is calculated in a similar way and assigned a value of 500 ADC units.

`TOPPING_VOLTAGE` is the limit for the battery open-circuit voltage used to start recharging (for doing micro charging cycles and keeping the battery near maximum capacity if left charging for extended periods). It is used together with the `BATTERY_STANDBY_MODE` define which enables this feature. For this implementation, a threshold of 3.9V or 650 ADC units is used.

Charging and End-of-Charge (EOC) Current Calculation

Precharge and charge currents should be defined for a certain hardware configuration. In this case, the charging current is calculated based on the converter input current (rectifier bridge current). Considering a 3000 mAh battery and 10% precharge current for voltages below 3.0V, maximum current is calculated with the following formula shown in Equation 10.

EQUATION 10: BATTERY PRECHARGE CURRENT CALCULATION

$$I_{IN} = \frac{I_{OUT} \times V_{OUT}}{V_{IN} \times \eta} = \frac{0.3A \times 3.0V}{10V \times 0.95} = 0.0947A$$

The input voltage (`VIN_SETPOINT`) is kept at 10V by the Qi control loop and the synchronous buck converter (with diode emulation) efficiency is around 90-95%. The `ILIM_PRECHARGE` value defined in the header file `LiChem.h` is in ADC units.

EQUATION 11: BATTERY PRECHARGE CURRENT IN ADC UNITS

$$I_{IN_ADC} = \frac{I_{IN} \times R_S \times A \times 2^{ADC_{BITS}}}{V_{REF}} =$$

$$\frac{0.0947A \times 0.1\Omega \times 10 \times 1024}{2.048V} = 47.35$$

The charging current is calculated using the same formula and needs to be defined for each negotiable power level (15W, 10W and 5W). In this case, it was calculated for 3A, 2A and 1A output current at 4.2V.

```
#define    ILIM     675    //~3000 mA
#define  ILIM_MED   450    //~2000 mA
#define  ILIM_LOW   225    //~1000 mA
```

The charging current for the Qi 1.1 5W protocol is calculated for a lower input voltage (`VIN_SETPOINT_LP`), because in this mode, the base station is either supplied by a low voltage source which forces Basic mode or simply has only basic functionality and the receiver will not be able to reach `VIN_SETPOINT`. In this case, output current is set to 1A and input voltage to 8V. Input current has a calculated value of 0.525A, so `ILIM_NOFOD` will be defined with a value of 262 ADC units.

Charge termination current is the same for both Qi 1.1 and 1.2 (the input voltages are close and the value is high enough to allow differences). For example, a 300 mA charge termination output current at 4.2V translates into 0.133A input current at 10V or 66 ADC units (`ISTOP` define). For the basic 5W Qi 1.1 functionality, input voltage is 8V, so the resulting output termination current is 240 mA. For tighter accuracy, the user may interrogate the `flagz.qi_fod_ext` flag to determine if the receiver is working in Basic mode or not and modify the termination current.

CONCLUSION

The Microchip advanced Qi receiver is a low-cost implementation of the Qi 1.2 wireless charging protocol, bundled with buck power supply and fully featured Li-Ion charging algorithm, all managed by an 8-bit microcontroller in firmware. This offers a lot of flexibility compared to existing ASICs, as all the firmware defined parameters can be changed in the provided MPLAB X IDE project. For example, the charger part can be easily modified for different battery chemistries or series/parallel configurations of the cells.

The Qi 1.2 medium power profile allows receivers to draw up to 15W of power and can be used in more power-intensive applications, such as home or semi-professional power tools and in bigger portable devices (with bigger batteries). Besides more power, all the advantages of wireless charging are still present, allowing the manufacture of truly water and dust-resistant devices.

REFERENCES

1. *"The Qi Wireless Power Transfer System Power Class 0 Specification, Parts 1 and 2: Interface Definitions"*, Wireless Power Consortium, 2017, pp. 1-165.
2. *"MCP6001/1R/1U/2/4 Data Sheet – 1 MHz, Low-Power Op Amp"* (DS20001733), Microchip Technology Inc.
3. *"PIC16(L)F18325/18345 Data Sheet – Full-Featured, Low Pin Count Microcontrollers with XLP"* (DS40001795), Microchip Technology Inc.
4. *"MCP14628 Data Sheet – 2A Synchronous Buck Power MOSFET Driver"* (DS22083), Microchip Technology Inc.
5. *"MCP1799 Data Sheet – 80 mA High-Voltage Automotive LDO"* (DS20006248), Microchip Technology Inc.
6. *AN3441, "Qi Wireless Power Micro-Receiver Reference Design"* Application Note (DS00003441), Microchip Technology Inc.

© 2020 Microchip Technology Inc.

Note the following details of the code protection feature on Microchip devices:

- Microchip products meet the specification contained in their particular Microchip Data Sheet.
- Microchip believes that its family of products is one of the most secure families of its kind on the market today, when used in the intended manner and under normal conditions.
- There are dishonest and possibly illegal methods used to breach the code protection feature. All of these methods, to our knowledge, require using the Microchip products in a manner outside the operating specifications contained in Microchip's Data Sheets. Most likely, the person doing so is engaged in theft of intellectual property.
- Microchip is willing to work with the customer who is concerned about the integrity of their code.
- Neither Microchip nor any other semiconductor manufacturer can guarantee the security of their code. Code protection does not mean that we are guaranteeing the product as "unbreakable."

Code protection is constantly evolving. We at Microchip are committed to continuously improving the code protection features of our products. Attempts to break Microchip's code protection feature may be a violation of the Digital Millennium Copyright Act. If such acts allow unauthorized access to your software or other copyrighted work, you may have a right to sue for relief under that Act.

Information contained in this publication regarding device applications and the like is provided only for your convenience and may be superseded by updates. It is your responsibility to ensure that your application meets with your specifications. MICROCHIP MAKES NO REPRESENTATIONS OR WARRANTIES OF ANY KIND WHETHER EXPRESS OR IMPLIED, WRITTEN OR ORAL, STATUTORY OR OTHERWISE, RELATED TO THE INFORMATION, INCLUDING BUT NOT LIMITED TO ITS CONDITION, QUALITY, PERFORMANCE, MERCHANTABILITY OR FITNESS FOR PURPOSE**.** Microchip disclaims all liability arising from this information and its use. Use of Microchip devices in life support and/or safety applications is entirely at the buyer's risk, and the buyer agrees to defend, indemnify and hold harmless Microchip from any and all damages, claims, suits, or expenses resulting from such use. No licenses are conveyed, implicitly or otherwise, under any Microchip intellectual property rights unless otherwise stated.

For information regarding Microchip's Quality Management Systems, please visit www.microchip.com/quality.

Trademarks

The Microchip name and logo, the Microchip logo, Adaptec, AnyRate, AVR, AVR logo, AVR Freaks, BesTime, BitCloud, chipKIT, chipKIT logo, CryptoMemory, CryptoRF, dsPIC, FlashFlex, flexPWR, HELDO, IGLOO, JukeBlox, KeeLoq, Kleer, LANCheck, LinkMD, maXStylus, maXTouch, MediaLB, megaAVR, Microsemi, Microsemi logo, MOST, MOST logo, MPLAB, OptoLyzer, PackeTime, PIC, picoPower, PICSTART, PIC32 logo, PolarFire, Prochip Designer, QTouch, SAM-BA, SenGenuity, SpyNIC, SST, SST Logo, SuperFlash, Symmetricom, SyncServer, Tachyon, TempTrackr, TimeSource, tinyAVR, UNI/O, Vectron, and XMEGA are registered trademarks of Microchip Technology Incorporated in the U.S.A. and other countries.

APT, ClockWorks, The Embedded Control Solutions Company, EtherSynch, FlashTec, Hyper Speed Control, HyperLight Load, IntelliMOS, Libero, motorBench, mTouch, Powermite 3, Precision Edge, ProASIC, ProASIC Plus, ProASIC Plus logo, Quiet-Wire, SmartFusion, SyncWorld, Temux, TimeCesium, TimeHub, TimePictra, TimeProvider, Vite, WinPath, and ZL are registered trademarks of Microchip Technology Incorporated in the U.S.A.

Adjacent Key Suppression, AKS, Analog-for-the-Digital Age, Any Capacitor, AnyIn, AnyOut, BlueSky, BodyCom, CodeGuard, CryptoAuthentication, CryptoAutomotive, CryptoCompanion, CryptoController, dsPICDEM, dsPICDEM.net, Dynamic Average Matching, DAM, ECAN, EtherGREEN, In-Circuit Serial Programming, ICSP, INICnet, Inter-Chip Connectivity, JitterBlocker, KleerNet, KleerNet logo, memBrain, Mindi, MiWi, MPASM, MPF, MPLAB Certified logo, MPLIB, MPLINK, MultiTRAK, NetDetach, Omniscient Code Generation, PICDEM, PICDEM.net, PICkit, PICtail, PowerSmart, PureSilicon, QMatrix, REAL ICE, Ripple Blocker, SAM-ICE, Serial Quad I/O, SMART-I.S., SQI, SuperSwitcher, SuperSwitcher II, Total Endurance, TSHARC, USBCheck, VariSense, ViewSpan, WiperLock, Wireless DNA, and ZENA are trademarks of Microchip Technology Incorporated in the U.S.A. and other countries.

SQTP is a service mark of Microchip Technology Incorporated in the U.S.A.
The Adaptec logo, Frequency on Demand, Silicon Storage Technology, and Symmcom are registered trademarks of Microchip Technology Inc. in other countries.
GestIC is a registered trademark of Microchip Technology Germany II GmbH & Co. KG, a subsidiary of Microchip Technology Inc., in other countries.
All other trademarks mentioned herein are property of their respective companies.

© 2020, Microchip Technology Incorporated, All Rights Reserved.

ISBN: 978-1-5224-6385-6

Worldwide Sales and Service

AMERICAS

Corporate Office
2355 West Chandler Blvd.
Chandler, AZ 85224-6199
Tel: 480-792-7200
Fax: 480-792-7277
Technical Support:
http://www.microchip.com/support
Web Address:
www.microchip.com

Atlanta
Duluth, GA
Tel: 678-957-9614
Fax: 678-957-1455

Austin, TX
Tel: 512-257-3370

Boston
Westborough, MA
Tel: 774-760-0087
Fax: 774-760-0088

Chicago
Itasca, IL
Tel: 630-285-0071
Fax: 630-285-0075

Dallas
Addison, TX
Tel: 972-818-7423
Fax: 972-818-2924

Detroit
Novi, MI
Tel: 248-848-4000

Houston, TX
Tel: 281-894-5983

Indianapolis
Noblesville, IN
Tel: 317-773-8323
Fax: 317-773-5453
Tel: 317-536-2380

Los Angeles
Mission Viejo, CA
Tel: 949-462-9523
Fax: 949-462-9608
Tel: 951-273-7800

Raleigh, NC
Tel: 919-844-7510

New York, NY
Tel: 631-435-6000

San Jose, CA
Tel: 408-735-9110
Tel: 408-436-4270

Canada - Toronto
Tel: 905-695-1980
Fax: 905-695-2078

ASIA/PACIFIC

Australia - Sydney
Tel: 61-2-9868-6733

China - Beijing
Tel: 86-10-8569-7000

China - Chengdu
Tel: 86-28-8665-5511

China - Chongqing
Tel: 86-23-8980-9588

China - Dongguan
Tel: 86-769-8702-9880

China - Guangzhou
Tel: 86-20-8755-8029

China - Hangzhou
Tel: 86-571-8792-8115

China - Hong Kong SAR
Tel: 852-2943-5100

China - Nanjing
Tel: 86-25-8473-2460

China - Qingdao
Tel: 86-532-8502-7355

China - Shanghai
Tel: 86-21-3326-8000

China - Shenyang
Tel: 86-24-2334-2829

China - Shenzhen
Tel: 86-755-8864-2200

China - Suzhou
Tel: 86-186-6233-1526

China - Wuhan
Tel: 86-27-5980-5300

China - Xian
Tel: 86-29-8833-7252

China - Xiamen
Tel: 86-592-2388138

China - Zhuhai
Tel: 86-756-3210040

ASIA/PACIFIC

India - Bangalore
Tel: 91-80-3090-4444

India - New Delhi
Tel: 91-11-4160-8631

India - Pune
Tel: 91-20-4121-0141

Japan - Osaka
Tel: 81-6-6152-7160

Japan - Tokyo
Tel: 81-3-6880- 3770

Korea - Daegu
Tel: 82-53-744-4301

Korea - Seoul
Tel: 82-2-554-7200

Malaysia - Kuala Lumpur
Tel: 60-3-7651-7906

Malaysia - Penang
Tel: 60-4-227-8870

Philippines - Manila
Tel: 63-2-634-9065

Singapore
Tel: 65-6334-8870

Taiwan - Hsin Chu
Tel: 886-3-577-8366

Taiwan - Kaohsiung
Tel: 886-7-213-7830

Taiwan - Taipei
Tel: 886-2-2508-8600

Thailand - Bangkok
Tel: 66-2-694-1351

Vietnam - Ho Chi Minh
Tel: 84-28-5448-2100

EUROPE

Austria - Wels
Tel: 43-7242-2244-39
Fax: 43-7242-2244-393

Denmark - Copenhagen
Tel: 45-4485-5910
Fax: 45-4485-2829

Finland - Espoo
Tel: 358-9-4520-820

France - Paris
Tel: 33-1-69-53-63-20
Fax: 33-1-69-30-90-79

Germany - Garching
Tel: 49-8931-9700

Germany - Haan
Tel: 49-2129-3766400

Germany - Heilbronn
Tel: 49-7131-72400

Germany - Karlsruhe
Tel: 49-721-625370

Germany - Munich
Tel: 49-89-627-144-0
Fax: 49-89-627-144-44

Germany - Rosenheim
Tel: 49-8031-354-560

Israel - Ra'anana
Tel: 972-9-744-7705

Italy - Milan
Tel: 39-0331-742611
Fax: 39-0331-466781

Italy - Padova
Tel: 39-049-7625286

Netherlands - Drunen
Tel: 31-416-690399
Fax: 31-416-690340

Norway - Trondheim
Tel: 47-7288-4388

Poland - Warsaw
Tel: 48-22-3325737

Romania - Bucharest
Tel: 40-21-407-87-50

Spain - Madrid
Tel: 34-91-708-08-90
Fax: 34-91-708-08-91

Sweden - Gothenberg
Tel: 46-31-704-60-40

Sweden - Stockholm
Tel: 46-8-5090-4654

UK - Wokingham
Tel: 44-118-921-5800
Fax: 44-118-921-5820

© 2020 Microchip Technology Inc.