20-Lead Very Thin Plastic Quad Flat, No Lead Package (LXX) - 3x3x0.9 mm Body [VQFN] No Exposed Pad

Note: For the most current package drawings, please see the Microchip Packaging Specification located at http://www.microchip.com/packaging

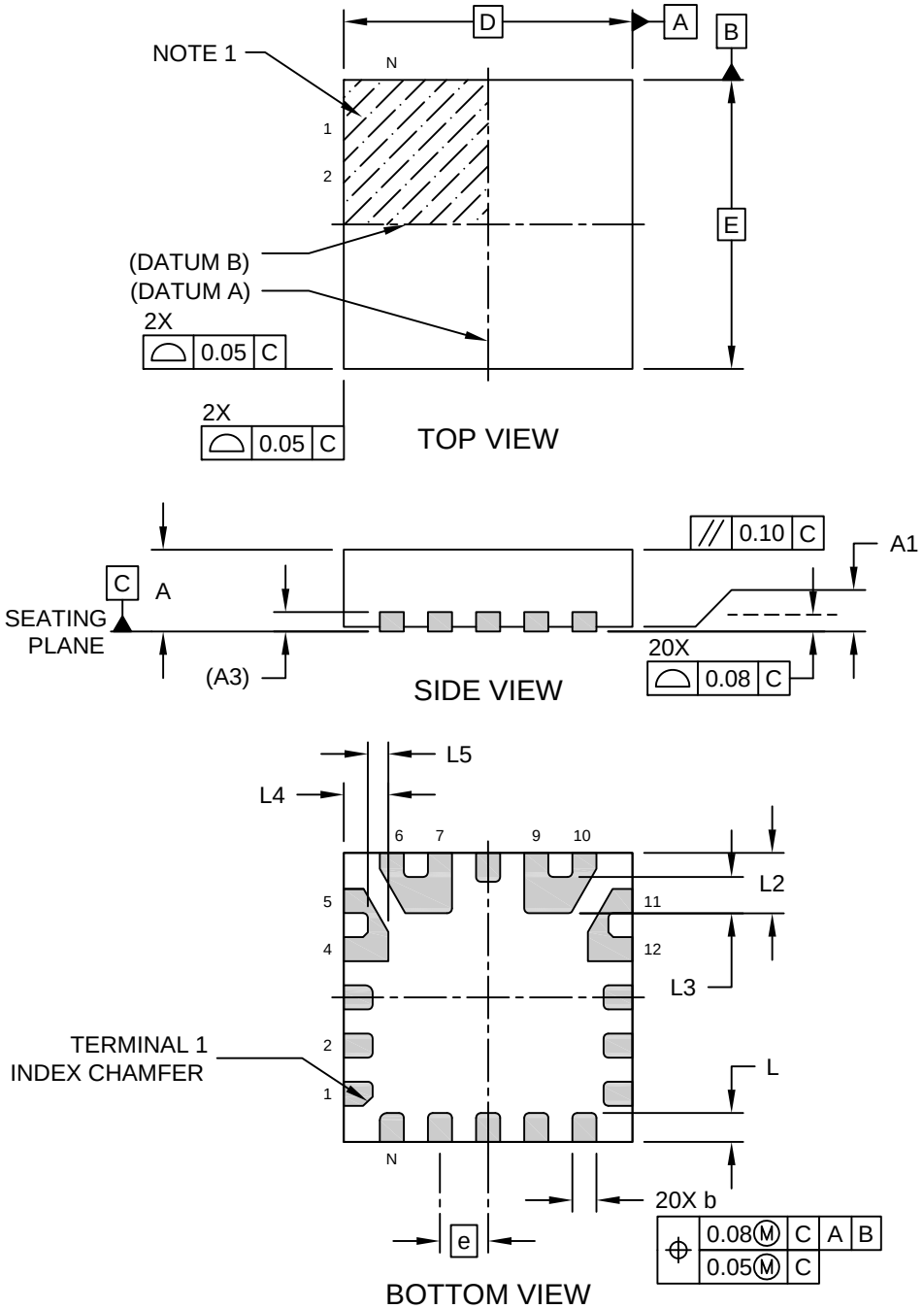

Microchip Technology Drawing C04-421 Rev C Sheet 1 of 2

© 2017 Microchip Technology Inc.

20-Lead Very Thin Plastic Quad Flat, No Lead Package (LXX) - 3x3x0.9 mm Body [VQFN] No Exposed Pad

Note: For the most current package drawings, please see the Microchip Packaging Specification located at http://www.microchip.com/packaging

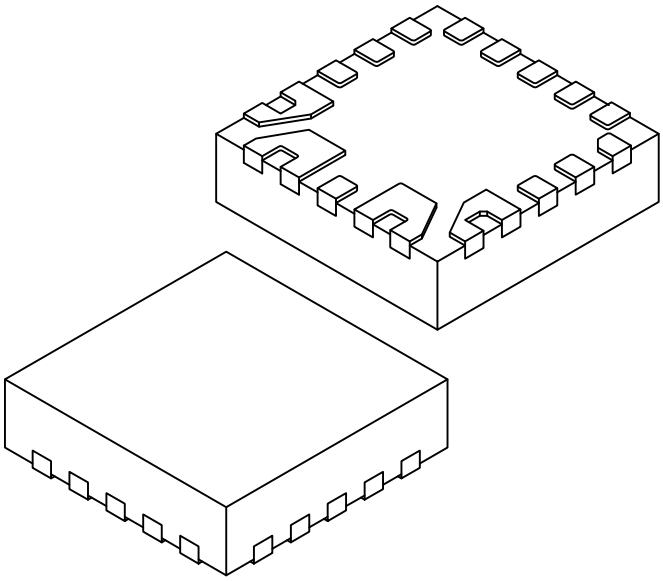

Units		MILLIMETERS		
Dimension Limits		MIN	NOM	MAX
Number of Terminals	N	20		
Pitch	e	0.50 BSC		
Overall Height	A	0.80	0.85	0.90
Standoff	A1	0.00	0.02	0.05
Terminal Thickness	A3	0.203 REF		
Overall Length	D	3.00 BSC		
Overall Width	E	3.00 BSC		
Terminal Length	L	0.25	0.30	0.35
Terminal Length	L2	0.58	0.63	0.68
Terminal Length	L3	0.33	0.38	0.43
Terminal Length	L4	0.41	0.46	0.51
Terminal Length	L5	0.16	0.21	0.26
Terminal Width	b	0.20	0.25	0.30

Notes:

1. Pin 1 visual index feature may vary, but must be located within the hatched area.
2. Package is saw singulated
3. Dimensioning and tolerancing per ASME Y14.5M

   BSC: Basic Dimension. Theoretically exact value shown without tolerances.

   REF: Reference Dimension, usually without tolerance, for information purposes only.

© 2017 Microchip Technology Inc.

Land Pattern

20-Lead Very Thin Plastic Quad Flat, No Lead Package (LXX) - 3x3x0.9 mm Body [VQFN] No Exposed Pad

Note: For the most current package drawings, please see the Microchip Packaging Specification located at http://www.microchip.com/packaging

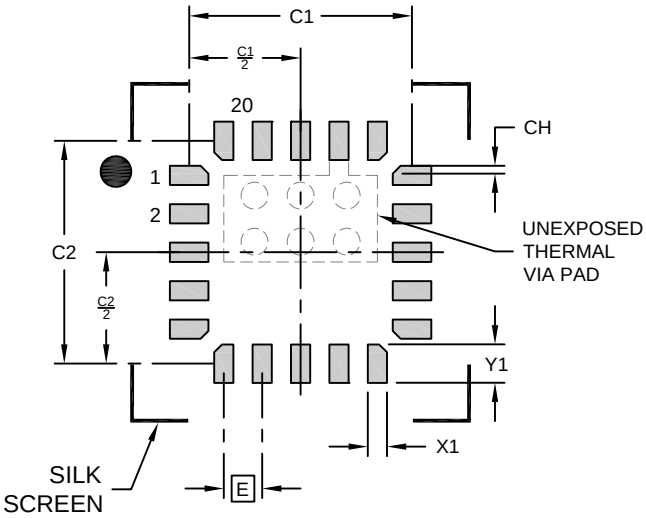

EXPOSED METAL

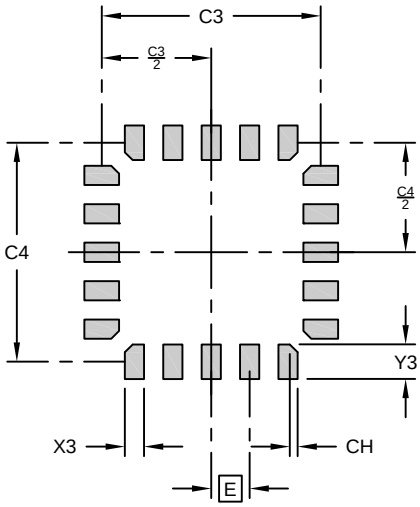

SOLDER STENCIL OPENINGS

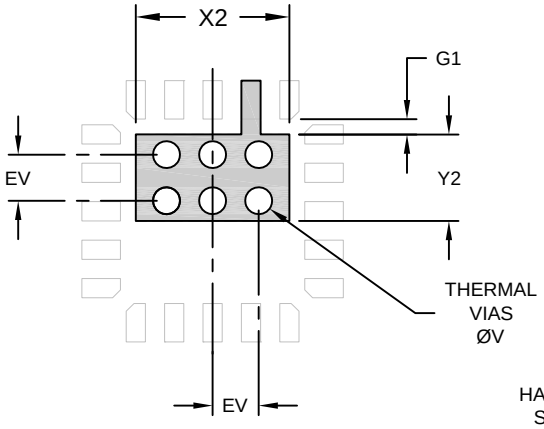

FILLED THERMAL VIAS

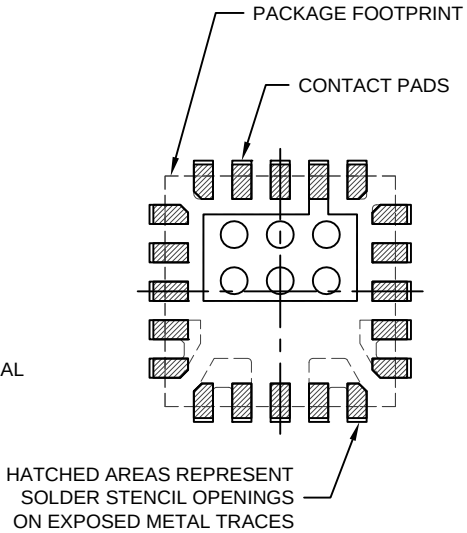

OVERLAY

Microchip Technology Drawing C04-2421 Rev C Sheet 1 of 2

© 2017 Microchip Technology Inc.

Land Pattern

20-Lead Very Thin Plastic Quad Flat, No Lead Package (LXX) - 3x3x0.9 mm Body [VQFN] No Exposed Pad

Note: For the most current package drawings, please see the Microchip Packaging Specification located at http://www.microchip.com/packaging

RECOMMENDED LAND PATTERN & SOLDER STENCIL OPENING

Units		MILLIMETERS		
Dimension Limits		MIN	NOM	MAX
Contact Pitch	E		0.50 BSC	
Contact Pad Spacing	C1		2.90	
Contact Pad Spacing	C2		2.90	
Contact Pad Width (X20)	X1			0.25
Contact Pad Length (X19)	Y1			0.50
Chamfer (X8)	CH		0.10	
Contact Pad to Center Pad (X10)	G1	0.20		
Thermal Via Pad Width	X2			2.00
Thermal Via Pad Length	Y2			1.13
Thermal Via Diameter (X6)	V		0.35	
Thermal Via Pitch	EV		0.60	
Solder Stencil Opening Spacing	C3		2.85	
Solder Stencil Opening Spacing	C4		2.85	
Solder Stencil Opening	X3			0.25
Solder Stencil Opening	Y3			0.45

Notes:

1. Dimensioning and tolerancing per ASME Y14.5M
   BSC: Basic Dimension. Theoretically exact value shown without tolerances.
2. For best soldering results, thermal vias, if used, should be filled to avoid solder loss during reflow process

© 2017 Microchip Technology Inc.